TAPEPRO
DRYWALL TOOLS
Automatic Taper

(Sheet 1 of 3)

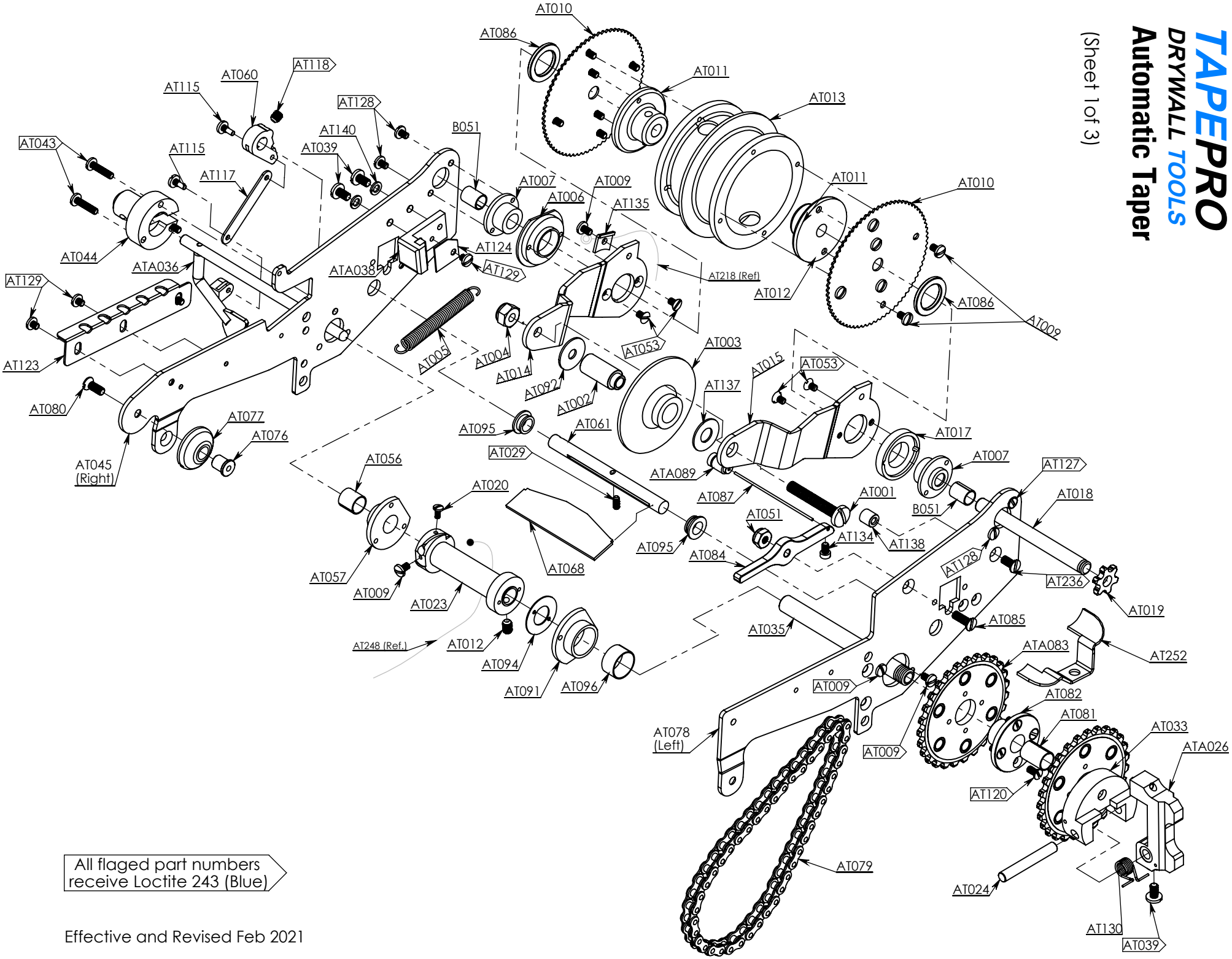

All flaged part numbers receive Loctite 243 (Blue)

Effective and Revised Feb 2021

TAPEPRO
DRYWALL TOOLS
Automatic Taper
(Sheet 2 of 3)

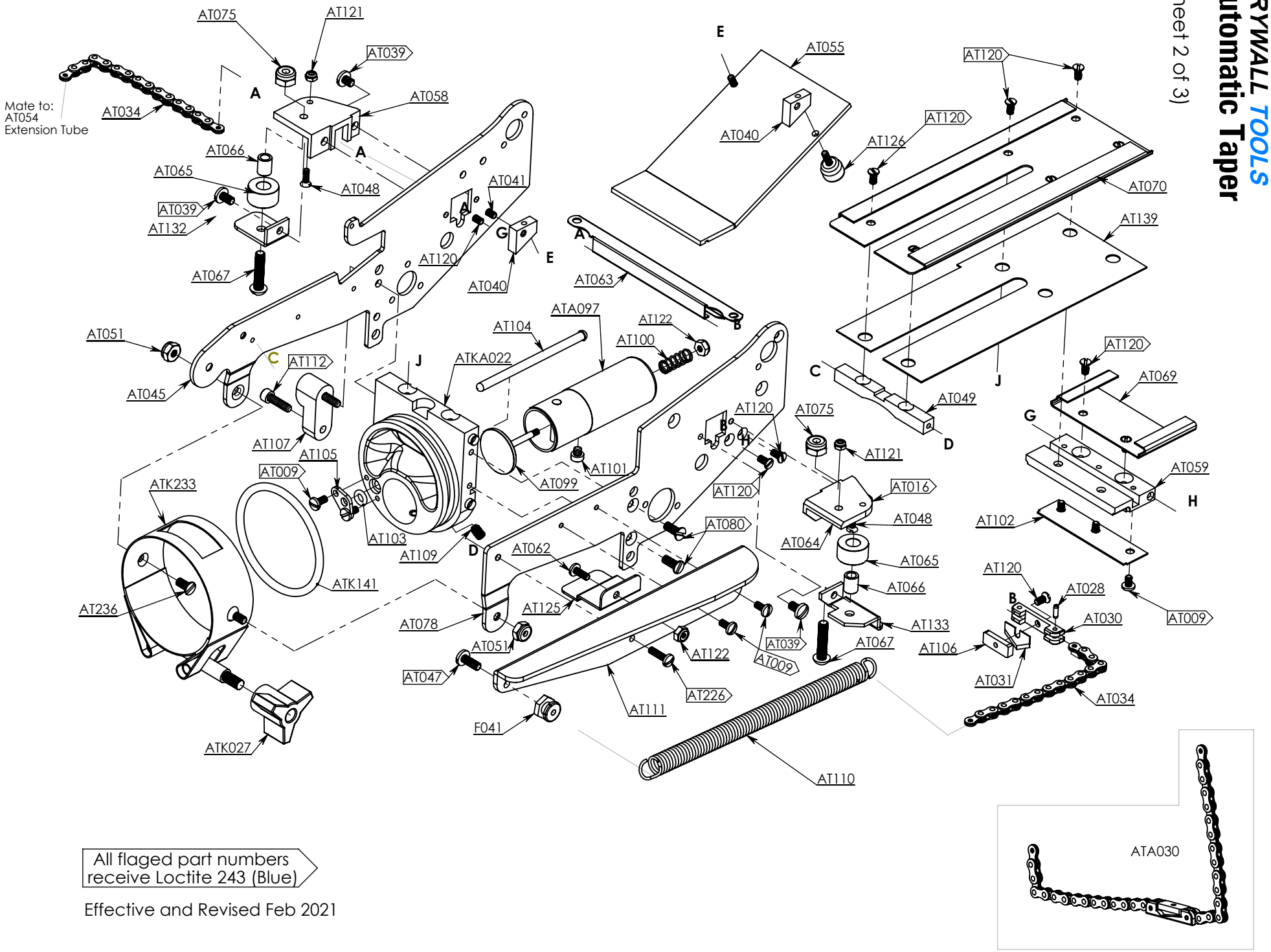

All flaged part numbers receive Loctite 243 (Blue)

Effective and Revised Feb 2021

TAPEPRO DRYWALL TOOLS
Automatic Taper
(Sheet 3of 3)

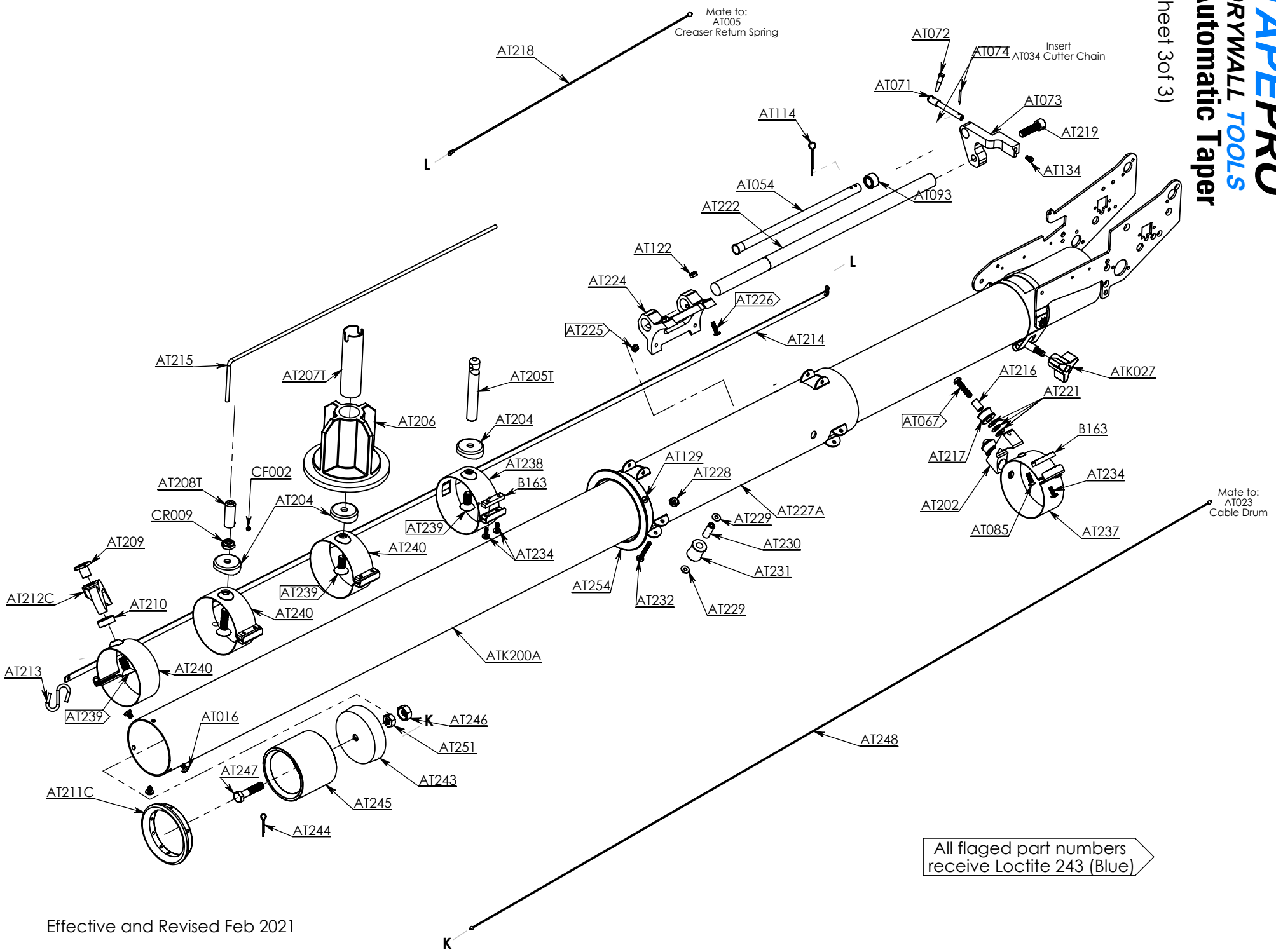

All flaged part numbers receive Loctite 243 (Blue)

Effective and Revised Feb 2021